Introduction of Manufacturing Systems Laboratory

Departemen Teknik dan Sistem Industri
Fakultas Teknologi Industri dan Rekayasa Sistem

Institut Teknologi Sepuluh Nopember

Sejarah Singkat

Berdiri pada tahun 1995 dengan nama Laboratorium Sistem Produksi

Tahun 1999 berganti nama menjadi Laboratorium Sistem Manufaktur

Tahun 2020 menjadi Laboratorium Manufacturing Systems dengan tag line **Smart & Green**

(KEPUTUSAN REKTOR INSTITUT TEKNOLOGI SEPULUH NOPEMBER NOMOR T/1399/IT2/HK.00.01/2020)

Dosen

	Prof. Dr. Ir. Udisubakti Ciptomulyono, M.Eng.Sc.	Environmental Management, Multi-Criterie Decision Analys Management Technology		**Nani Kurniati, S.T., M.T., Ph.D.**	Quality Engineering, Reliability and Maintenance Managem
	Prof. Ir. Moses Laksono Singgih.,M.Sc., M.Reg.Sc., Ph.D.	Productivity, Quality and Manufacturing Systems		**Putu Dana Karningsih, S.T., M.Eng.Sc., Ph.D.**	Integrated Product and Process Development, Lean, Manufa System, Supply Chain Risk Management
	Ir. H. Hari Supriyanto, M.S.I.E.	Six Sigma, Quality Improvement, Statistics		**Yudha Prasetyawan, S.T., M.Eng.**	CAD/CAM/CIM, Manufacturing System Planning, Advanc Manufacturing Technology
	Dr. Ir. Mokhamad Suef, M.Sc. (Eng)	Quality Engineering and Management, Manufacturing Engineering and Management		**Dewanti Anggrahini, S.T., M.T.**	Operations & Risk Management, Smart Manufacturing Syst
	Dr. Maria Anityasari, S.T., M.Eng., Ph.D.	Sustainable Manufacturing, Life Cycle Management, Sustainability		**Rindi Kusumawardani, S.Si., M.Sc.**	Sistem Kendali Manufaktur, ArtificialIntelligence

Pengajaran

Program Sarjana S1

Program Pasca Sarjana - Master S2:
Konsentrasi Manufacturing Systems Engineering and Management

Program Pasca Sarjana - Doktoral S3:
Konsentrasi Manufacturing Systems Engineering and Management

Souvenir Dept Teknik Industri – Praktikum Proses Manufaktur Bahan Acrylic – Proses CNC Milling Plastic ABS - Proses 3D Printing

Produk Prototipe dari Mesin 3D Printing

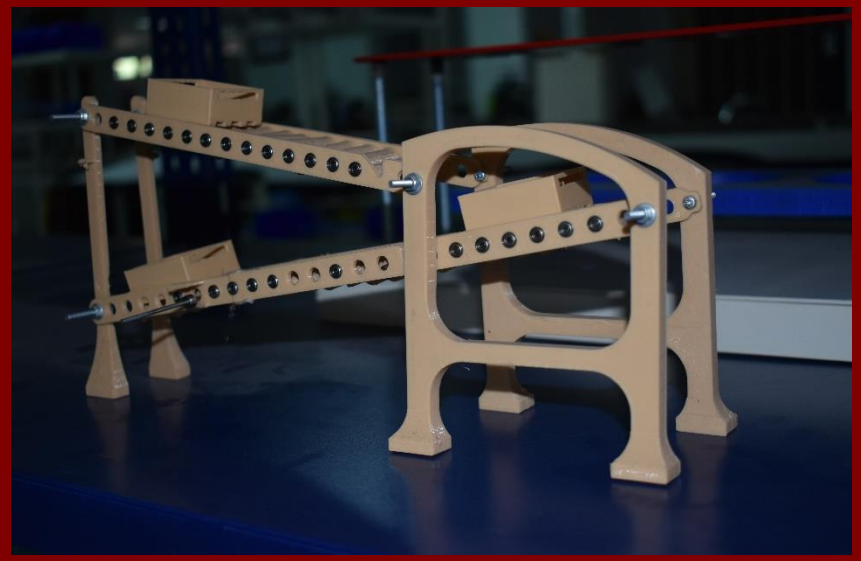

Prototipe Material Handling konsep Karakuri - Praktikum Otomasi Industri

Program World Class Professor

International Student Exchange Mobility – Laboratory Internship Program

- Mohd Syafaad Bin Mohd Saad – University of Kuala Lumpur Malaysia
- Iffah Gani - Brunei Darussalam University

Penelitian

Peta Penelitian 2020-2025

Selected list of publications

- Manufacturing sustainability assessment using a lean manufacturing tool, S Hartini, U Ciptomulyono, M Anityasari, *International Journal of Lean Six Sigma*, 2020
- Integrated risk to food safety and halal using a Bayesian Network model, HC Wahyuni, I Vanany, U Ciptomulyono, JDT Purnomo, *Supply Chain Forum: An International Journal*, 2020
- Expertise-based ranking of experts: An assessment level approach,E Herowati, U Ciptomulyono, J Parung, *Fuzzy Sets and Systems*, 2017
- New Product Development from Inactive Problem Perspective in Indonesian SMEs to Open Innovation, R Prabowo, ML Singgih, PD Karningsih, E Widodo, *Journal of Open Innovation: Technology, Market, and Complexity*, 2020
- Determination of Modules in Pleasurable Design to Fulfil Customer Requirements and Provide a Customized Product in the Food Industry, ER Wedowati, ML Singgih, IK Gunarta, *Designs*, 2020
- Model of quality costs and economic benefits of a business process of manufacturing companies, M Rosiawan, ML Singgih, E Widodo, Cogent Engineering, 2019

- Categorizing product attributes efficiently in QFD-Kano: a case analysis in telecommunication, M Suef, S Suparno, ML Singgih, The TQM Journal, 2017
- Lean Assessment Matrix: A Proposed Supporting Tool for Lean Manufacturing Implementation, PD Karningsih, AT Pangesti, M Suef, IOP Conference Series: Materials Science and Engineering 598 (1), 2019
- Manufacturing strategy improvement based on lean methodology, Y Prasetyawan, M Suef, N Rifqy, IOK Wardani, IOP Conference Series: Materials Science and Engineering , 2019
- Indonesian sustainable food-availability policy assessment using system dynamics: A solution for complexities, W Findiastuti, ML Singgih, M Anityasari, Cogent Food & Agriculture , 2018
- Analysis of Success Factors for E-Waste Collection in Indonesia,M Anityasari, YS Nur, Applied Mechanics and Material, 2016

- A sampling scheme for resubmitted lots based on one-sided capability indices, N Kurniati, RH Yeh, CW Wu, Quality Technology & Quantitative Management, 2016
- Performance measurement on lease equipment with overall equipment effectiveness, A Supriatna, ML Singgih, E Widodo, N Kurniati, AIP Conference Proceedings, 2019
- Determining Factors of Quality Uncertainty and Its Control Analysis in Remanufacturing System, MI Mustajib, U Ciptomulyono, N Kurniati, International Journal of Applied Science and Engineering, 2019
- Automation strategy for local commodity enhancement, Y Prasetyawan, E Agustuani, IOK Wardani, IOP Conference Series: Materials Science and Engineering, 2019
- Readiness Assessment Towards Smart Manufacturing System for Tuna Processing Industry in Indonesia, D Anggrahini, N Kurniati, PD Karningsih, SM Parenreng, N Syahroni,IOP Conference Series: Materials Science and Engineering, 2019

Pengabdian Masyarakat

KEGIATAN PENGABDIAN MASYARAKAT LPPM ITS:
PENINGKATAN KOMPETENSI PELAKU USAHA
KECAMATAN NGANCAR KEDIRI
2016

SMK NEGERI 3 SURABAYA
SMK NEGERI 3

PEMERINTAH KABUPATEN MALANG
Malang
Pengabdian Masyarakat Reguler : LPPM ITS
Pelatihan mengenai Peningkatan Kompetensi
Manajemen Operasi Keramba Jaring Apung
bagi Nelayan Pantai Malang Selatan

Teknik
INDUSTRI

Pelatihan untuk Guru dan Murid SMK Surabaya

Desain Alat Otomasi untuk UMKM

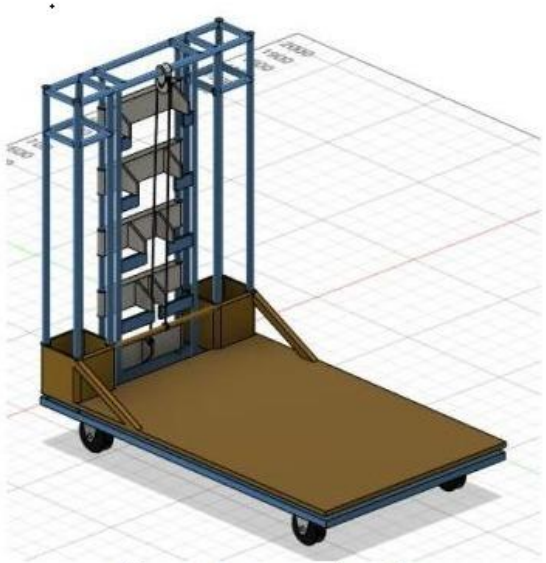

Figure 13. Proposed Trolley
Source: Authors' Illustration

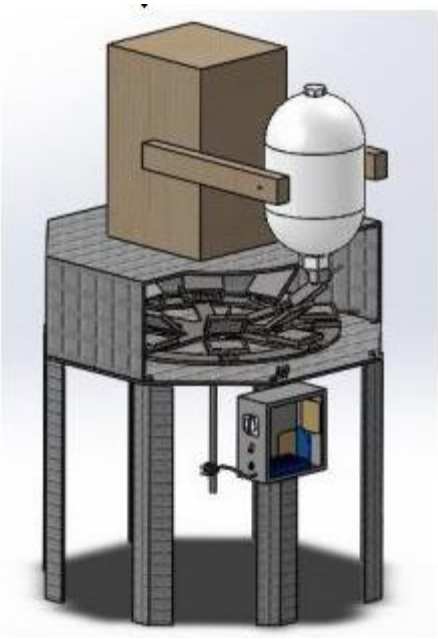

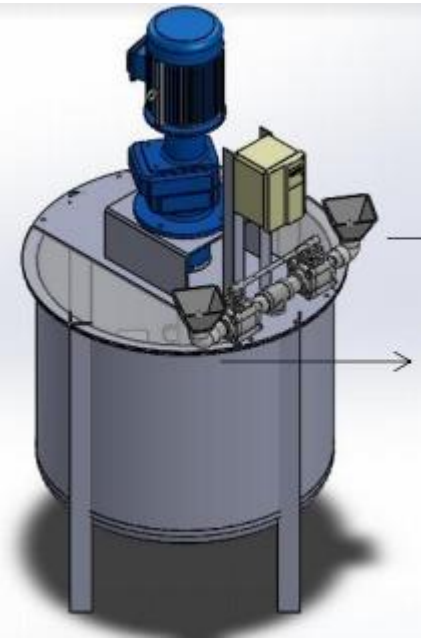

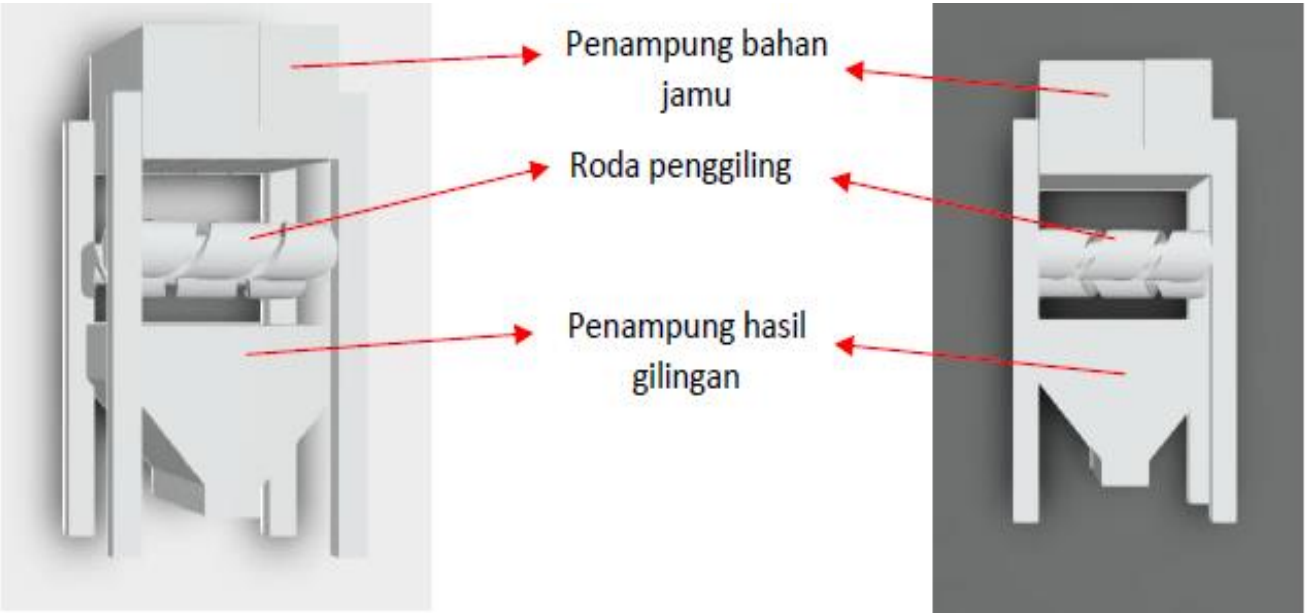

Desain Alat Bantu proses pengolahan Jamu

Pendampingan UKM Jamu, Desain Label kemasan Jamu dan Desain Rumah Jamu

Kerjasama

- Sejak 2015 Toyota Motor Manufacturing Indonesia (TMMIN) – Program CSR Monozukuri Project

  1. Integrasi Konsep Toyota Production Systems ke dalam Mata Kuliah dan Praktikum “Lean concept and Its Application”
  2. Aplikasi Karakuri untuk perbaikan proses

TOYOTA
Berbagi
MONOZUKURI PROJECT
Penyerahan Oleh
IR. AMIRUL CHUSNI
DIREKTUR TOYOTA INDONESIA AKADEMI

TOYOTA
Berbagi

We are welcoming for any cooperations and partnership in Academic activities, Research, Community Services, Projects, and Trainings

Contact us:

Manufacturing System Laboratory,
Industrial and Systems Engineering IT
1st Floor

Jalan Raya ITS, Kampus ITS
Sukolilo, Surabaya, Jawa Timur
60111, Indonesia

Follow our Instagram: @mansyslab_its

Manufacturing System Laboratory ,
Industrial Engineering Building 1st Floor,
ITS Surabaya Campus, 60111

W : its.ac.id/tindustri
E : labsisman1306@gmail.com
S : @sismanity